Universal Projector Ceiling Mount
with Adjustable Drop

For more information please visit www.btechavmounts.com/BT882

BT882

Registered Design Number: 3016251

BT882

Universal Projector Ceiling Mount
with Adjustable Drop

Designed for LCD/LED/DLP Projectors up to 10kg (22lbs)

- Hand lever for easy adjustment of ceiling drop: Min: 580mm (22.8") - Max: 830mm (32.7")
- Features +/-90° tilt, +/-90° roll and 360° swivel
- Suitable for angled / cathedral ceilings
- Integrated cable management
- Unique 'Carousel' mounting plate for universal compatibility
- Coverplates included for smart installation
- Steel safety wire for extra security
- Maximum distance between any two fixing points on projector: 340mm (13.4")
- Suitable for projectors with M2.5, M3, M4, M5 and M6 fixings
- Simple installation with all mounting hardware and fixings included
- Available in Black and Silver

'Carousel' mounting plate for universal compatibility

Hand lever for easy adjustment of ceiling drop

Ball joint adjustment for easy positioning of projector

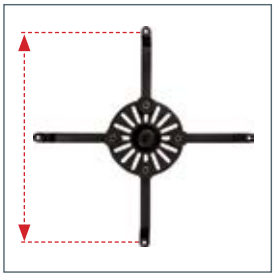

Maximum distance between any two fixing points: 340mm (13.4")

Universal Projector Ceiling Mount
with Adjustable Drop

For more information please visit www.btechavmounts.com/BT882

BT882

Registered Design Number: 3016251

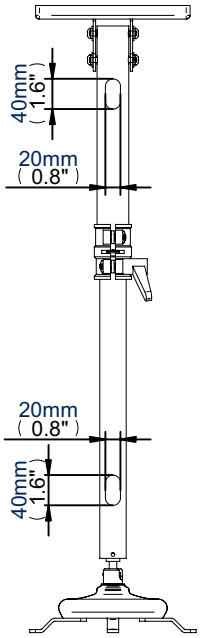

Front View

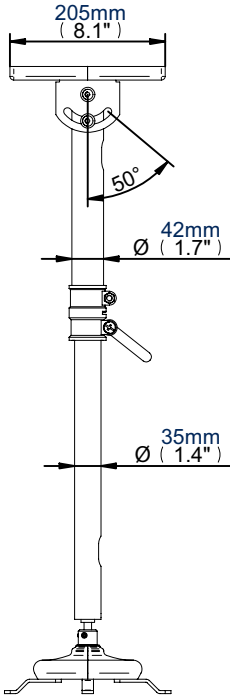

Side View

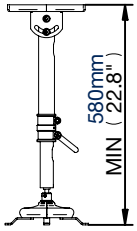

Side View - Minimum Extension

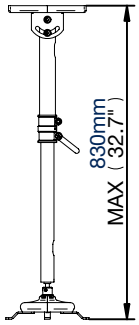

Side View - Maximum Extension

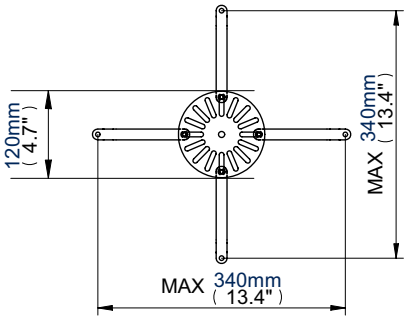

Interface

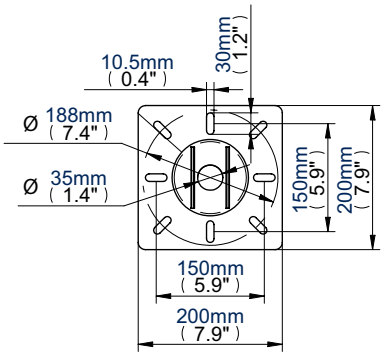

Ceiling Plate

Colour:	Order Ref:	EAN Code:	Master Carton Qty:	Inner Carton Qty:	Master Carton Weight:	Master Carton Cube:
Black	BT882/B	5019318088889	2	N/A	9.4kg (20.68lbs)	0.03cbm (1.07cuft)
Silver	BT882/S	5019318088827	2	N/A	9.4kg (20.68lbs)	0.03cbm (1.07cuft)

This information is intended as a guide only and reflects the current specification at the time of print.
B-Tech accepts no liability for the accuracy of the information contained in this document.

© 2010 B-Tech International Limited, a division of Bennett Technologies Limited. All rights reserved.
The information in this specification sheet reflects the current technical specifications at the time of print. We reserve the right to change the technical or physical specifications without prior notice.
The B-Tech name, the B-Tech logo, Better by Design and Mountlogic are all registered trademarks of B-Tech International Ltd. All other brands and products are trademarks of their respective owners.
All B-Tech images and symbols are exclusive property of B-Tech International Ltd. B-Tech accept no liability for loss or damage caused by improper installation or mounting on unstable structures.
Any reproduction or retransmission or republication of any part of this specification sheet is strictly prohibited, unless prior written permission has been granted by B-Tech International Ltd. E&OE.