BT7514

mountlogic range

FLAT SCREEN WALL MOUNT WITH SINGLE ARM EXTENSION, TILT & SWIVEL

INSTALLATION GUIDE & PARTS LIST

This Pack Contains 1 Mount

PLEASE KEEP THIS FOR FUTURE REFERENCE

Community Design No.
001713280-0007

SYSTEM2 COMPATIBLE

FEATURES

- Designed for medium flat screens up to 42" (107cm) / 25kg (55lbs)
- Fits screens with VESA mounting patterns:
  75 x 75mm, 100 x 100mm, 200 x 100mm and 200 x 200mm
- Incorporates post installation screen levelling at wall plate and screen mount
- Easy tilt adjustment +/-40° tilt
- Features two swivel points: 180° at wall and 240° at interface
- Alternative short-arm included
- Security locking screws and Allen key provided for a secure installation
- Simple 'hook-on' installation with all mounting hardware included

CONTENTS

Installation Safety Notes....2
Parts List....4
Optional Short Arm....6
Installation Instructions....7
Product Dimensions....11
B-Tech Contact Details....12

INSTALLATION TOOLS REQUIRED

13mm (1/2") spanner or socket

Drill

10mm (7/16") masonry bit or 6mm (1/4") wood bit

Pencil

Stud finder (optional)

B-TECH AUDIO VIDEO MOUNTS

www.btechavmounts.com

INSTALLATION SAFETY INSTRUCTIONS

CAUTION: This wall mount is intended for use only with the maximum weights indicated. Use with flat screens heavier than the maximum indicated may result in instability causing possible injury.

Do not attempt to install this product until all instructions and warnings have been read and properly understood. Please keep these instructions for future reference.
B-Tech International Limited, its distributors and dealers are not liable or responsible for damage or injury caused by improper installation, improper use or failure to observe these safety instructions. In such cases, all guarantees will expire.

General

B-Tech International Ltd recommends that a professional AV installer or other suitably qualified person install this product. Great care must always be taken during installation as most AV equipment is of a fragile nature, possibly heavy and easily damaged if dropped.
If you do not fully understand the instructions or are not sure how to install this product safely, then please consult a professional for advice and/or to install this product for you. Failure to mount this product correctly may cause serious injury or death both during installation and at any time thereafter.
Do not mount any AV equipment that exceeds the specific weight limit of the product you are installing. This weight limit will be clearly stated on each product and its packaging and will vary from product to product.
Flat screen must be fixed to the articulating arm before mounting arm onto wall mount.

Product location

Please pay careful attention to where this product is located. Some walls are not suitable for installation.
If located in a public or frequently populated area ensure that the product is out of the immediate reach of people. If any AV equipment is to be suspended over the likely path or location of people then great care should be taken to secure all parts of the installation from falling.
If you install this product on drywall it must be securely fixed to a wooden stud, concrete block or other permanent structure behind the drywall board. Installing on drywall boards alone will not support the weight of most AV equipment.
When drilling holes in walls it is essential to avoid contact with electrical cables and water or gas pipes contained within. Use of a good quality live wire detector and hidden object locator is therefore recommended. Only drill into structures when you are sure it is safe to do so.

Fixing hardware

It is highly recommended that all wall fixing screws be used where supplied and that the purpose of all other fixing hardware is fully understood. In some cases more AV equipment fixing hardware will be supplied to accommodate different models of equipment and set up configurations.
The installer must be satisfied that any supplied fixing hardware is suitable for each specific installation. If any fixing screws or included hardware are deemed not sufficient for a safe installation then please consult a professional or your local hardware store.

Hazard limitation

When routing cables take advantage of any built in cable management features that the product might provide and ensure that all cables are tidy and secure. Check to see that any moving aspect of the product can do so unhindered by any cabling.
Some products have moving parts and the potential to cause injury through the crushing or trapping of fingers or other body parts.
Particular attention to the nature of moving parts is required especially when assembling installing and adjusting during set up.
Immediately after installations double-check that the work done is safe and secure. Double-check all necessary fixings are present and are of ample tightness.
It is recommended that periodic inspections of the product and its fixing points are made as frequently as possible to ensure that safety is maintained. If in doubt consult a professional AV installer or other suitably qualified person.

CS
Společnost B-Tech International Ltd. doporučuje provést instalaci tohoto produktu prostřednictvím odborného instalátora AV či jinak způsobilé osoby. Společnost B-Tech International Ltd, její distributoři a prodejci nenesou odpovědnost za škody nebo zranění způsobená nevhodnou instalací. Tento výrobek je nutno umístit do vhodné konstrukce a používat jen po uvedenou maximální výšku.

DE
B-Tech International Ltd. empfiehlt, dass dieses Produkt durch einen qualifizierten AV-Techniker oder eine andere Person mit geeigneter Qualifikation installiert wird. B-Tech International Ltd, ihre Distributoren und Händler können nicht für durch fehlerhafte Montage verursachte Beschädigung oder Verletzung haftbar bzw. verantwortlich gemacht werden. Dieses Produkt muss auf eine geeignetem Untergrund montiert werden und darf nur bis zum angegebenen Höchstgewicht verwendet werden.

ES
B-Tech International Ltd. recomienda que un instalador de audio y video profesional u otra persona debidamente cualificada instalen este producto. B-Tech International Ltd, sus distribuidores y concesionarios no se hacen cargo ni se responsabilizan de ningún daño o lesión provocados por una instalación inapropiada. Este producto se debe montar en una estructura adecuada y se debe utilizar soportando solamente hasta el peso máximo indicado.

FR
B-Tech International Ltd. recommande de confier l'installation de ce produit à un installateur AV professionnel ou à une autre personne dûment qualifiée. B-Tech International Ltd, ses distributeurs et ses revendeurs ne sauraient être tenus responsables de tout dégât ou de toute blessure résultant d'une installation incorrecte. Ce produit doit être monté sur un support approprié et utilisé dans la limite du poids maximum indiqué.

IT
B-Tech International Ltd. consiglia di affidare l'installazione di questo prodotto a un installatore specializzato o ad altra persona adeguatamente qualificata. B-Tech International Ltd, i suoi distributori e rivenditori non accettano alcuna responsabilità nei riguardi di eventuali danni o infortuni causati da un'errata installazione. Questo prodotto deve essere fissato a una struttura idonea e utilizzato unicamente sino al peso massimo indicato.

NL
B-Tech International Ltd. adviseert om dit product te laten installeren door een professionele AV-installateur of andere hiervoor gekwalificeerde persoon. B-Tech International Ltd, haar distributeurs en dealers zijn niet aansprakelijk of verantwoordelijk voor schade of letsel die is veroorzaakt door onoordeelkundige installatie. Dit product moet worden gemonteerd aan een geschikte constructie, waarbij het aangegeven maximum gewicht niet mag worden overschreden.

PL
Firma B-Tech International Ltd. zaleca, aby ten produkt był instalowany przez profesjonalnych instalatorów AV lub inny odpowiednio przeszkolony personel. Firma B-Tech International Ltd, jej dystrybutorzy i dealerzy nie ponoszą odpowiedzialności za uszkodzenia lub obrażenia ciała powstałe w wyniku nieprawidłowej instalacji. Niniejszy produkt musi być zamontowany na odpowiedniej powierzchni, a podczas użytkowania nie wolno przekraczać podanego maksymalnego obciążenia.

PT
A B-Tech International Ltd. recomenda que a instalação deste produto seja efectuada por um instalador de AV profissional ou outra pessoa devidamente habilitada. A B-Tech International Ltd. e os seus distribuidores e concessionários não são responsáveis por danos ou lesões causados por uma instalação incorrecta. Este produto tem de ser montado numa estrutura adequada e utilizado somente até ao peso máximo indicado.

RU
Компания B-Tech International Ltd. рекомендует, чтобы установка данного изделия производилась инженером по установке аудио-видеотехники или другим специалистом с соответствующей квалификацией. Компания B-Tech International Ltd., ее дистрибьюторы и дилеры не несут ответственности за повреждения или травмы, полученные в результате неправильной установки. Данное изделие должно

BT7514 PARTS LIST

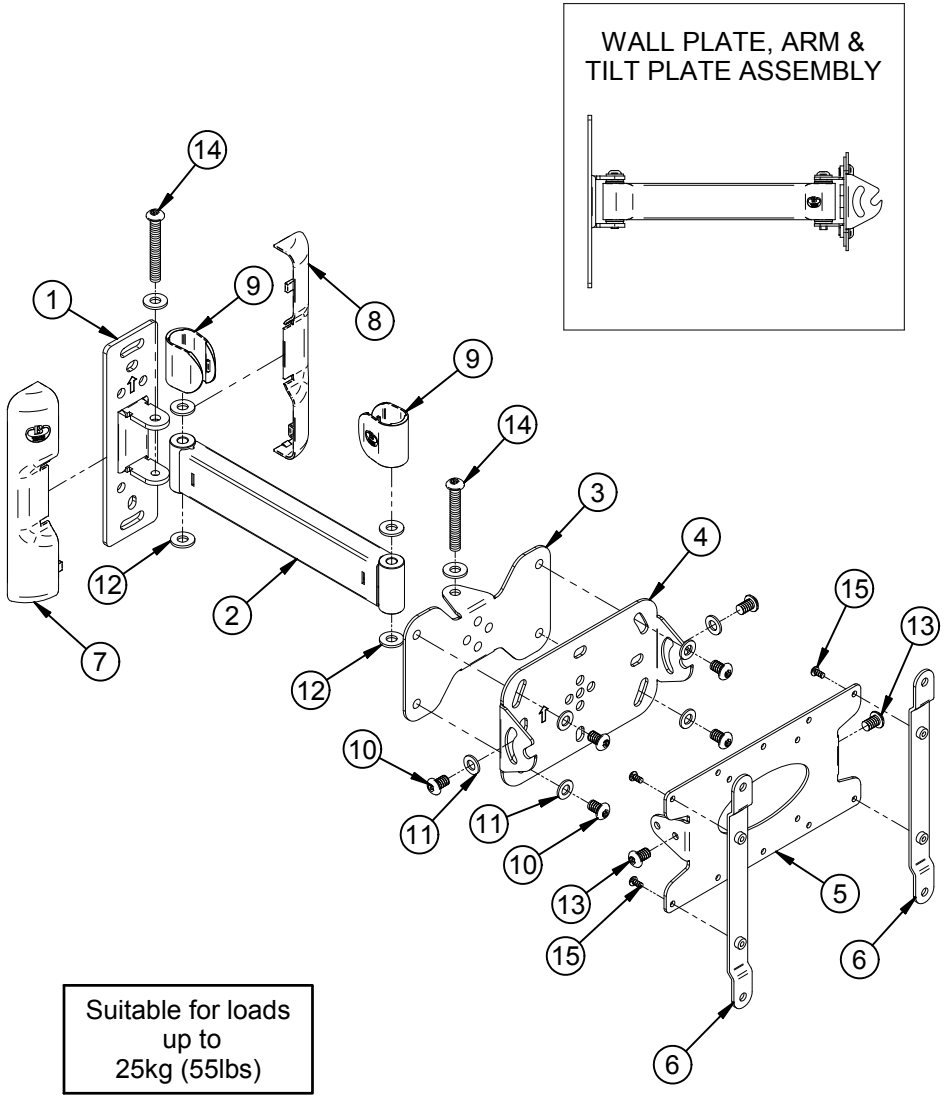

Suitable for loads up to 25kg (55lbs)

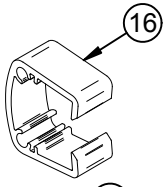

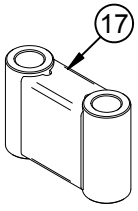

WALL FIXING KIT
(FOR FIXING MOUNT TO WALL)

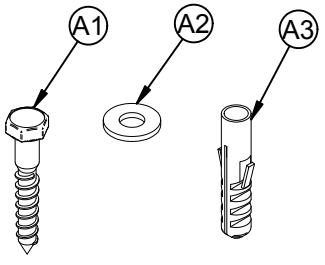

FLAT SCREEN INTERFACE KIT
(FOR ATTACHING MOUNT TO BACK OF FLAT SCREEN)

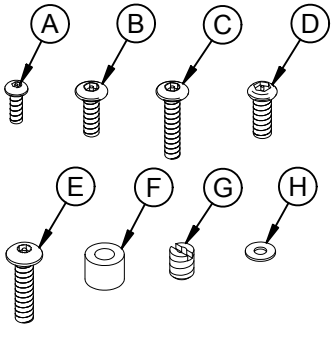

REF	PART NAME	QTY
1	WALL PLATE ASSEMBLY	1
2	LONG EXTENSION ARM	1
3	CONNECTOR PLATE	1
4	TILT PLATE	1
5	INTERFACE PLATE	1
6	ADAPTOR ARM	2
7	LEFT COVER	1
8	RIGHT COVER	1
9	ARM COVER	2
10	M8 X 12mm PIN HEX SECURITY SCREW	6
11	M8 METAL WASHER	6
12	M8 PLASTIC WASHER	6
13	M8 X 12mm PIN HEX SECURITY SCREW	2
14	M8 X 60mm PIN HEX SECURITY SCREW	2
15	M4 X 8mm PIN HEX SECURITY SCREW	4
16	CLIPLOGIC™ CABLE MANAGEMENT CLIP	2
17	SHORT ARM	1
18	2.5mm PIN HEX SECURITY KEY (FOR PART 15 & A)	1
19	3mm PIN HEX SECURITY KEY (FOR PARTS B & C)	1
20	4mm PIN HEX SECURITY KEY (FOR PARTS D & E)	1
21	5mm PIN HEX SECURITY KEY (FOR PARTS 10, 13 & 14)	1
INTERFACE KIT		
A	M4 X 12mm PIN HEX SECURITY SCREW	4
B	M5 X 16mm PIN HEX SECURITY SCREW	4
C	M5 X 25mm PIN HEX SECURITY SCREW	4
D	M6 X 16mm PIN HEX SECURITY SCREW	4
E	M6 X 25mm PIN HEX SECURITY SCREW	4
F	M6 x 12mm SPACER (FOR PARTS C & E)	4
G	M8 TO M4 ADAPTOR	4
H	M4 WASHER (FOR PART G)	4
FIXING KIT		
A1	M8 x 50mm COACH SCREW	4
A2	M8 METAL WASHER	4
A3	NO.10 WALL PLUG	4

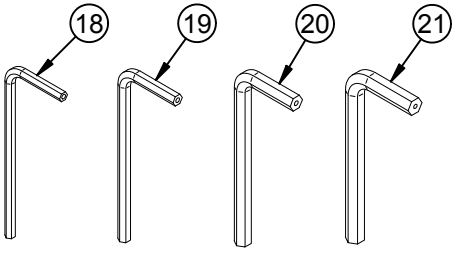

OPTIONAL SHORT ARM

Replace part 2 with part 17.

i.

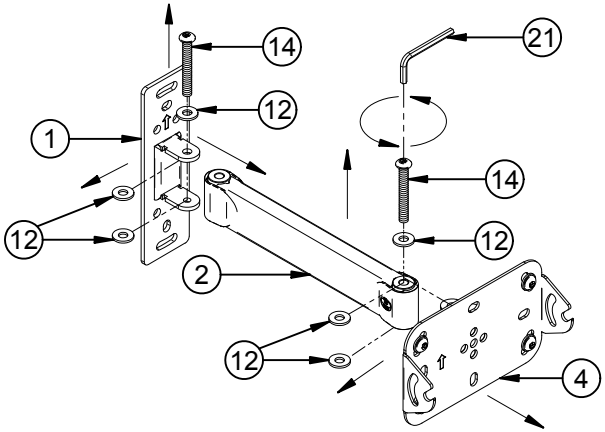

ii.

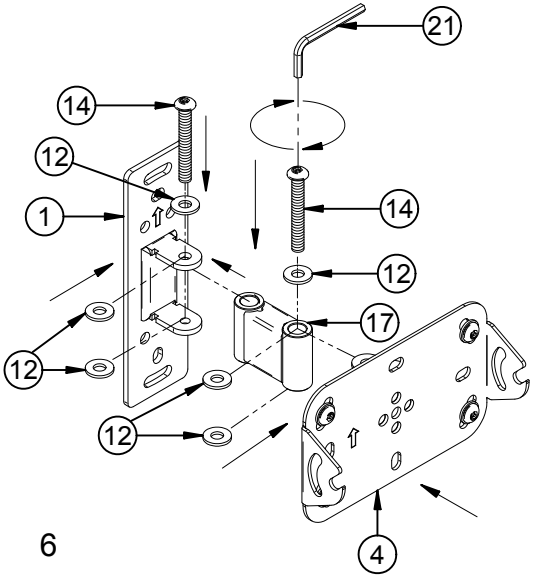

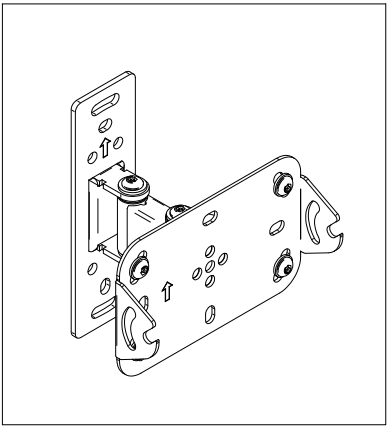

INSTALLATION INSTRUCTIONS

1 Fix wall plate to the wall using one of the following methods.

i. Concrete / brick walls.

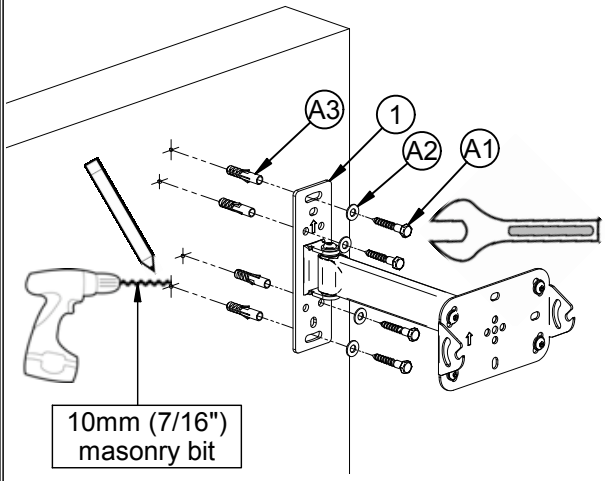

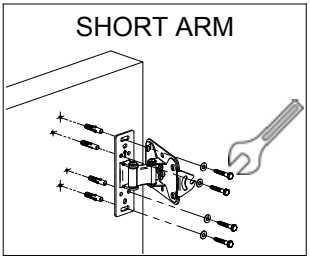

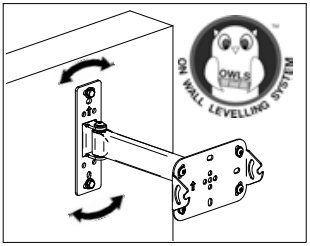

ii. Wood / stud walls.

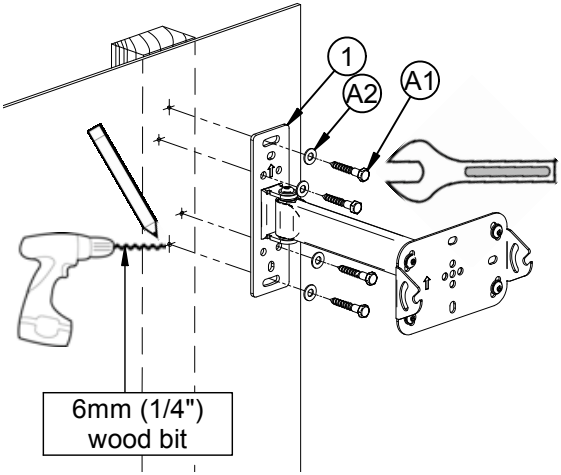

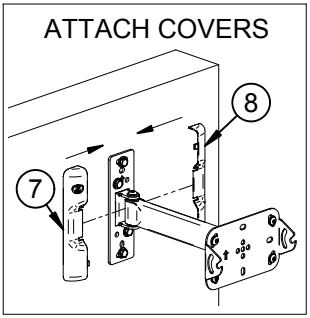

SCREENS WITH M8 FIXINGS

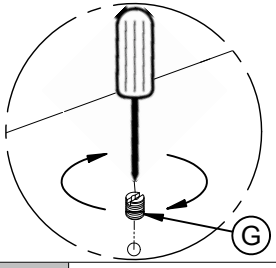

Screw parts G into the flat screen fixing holes.

Continue with screen mounting steps 2 and 3.

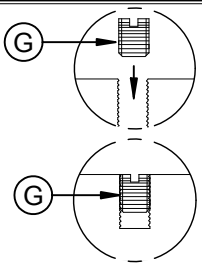

2 Attach the interface to the back of the screen.

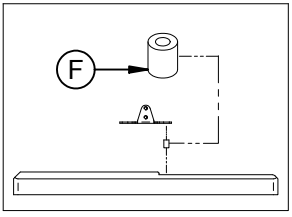

i.

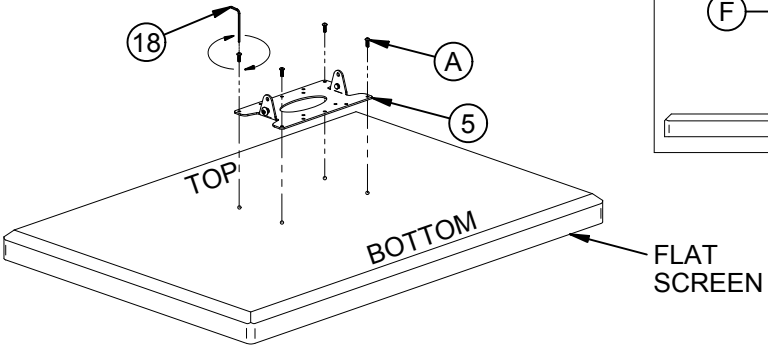

ii. For 200 x 200mm, attach adaptor arms to interface plate, then attach interface to the back of the screen.

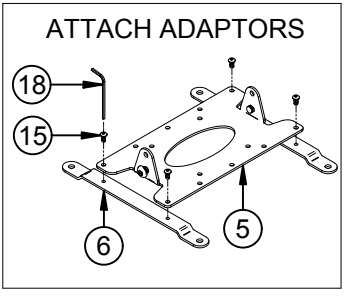

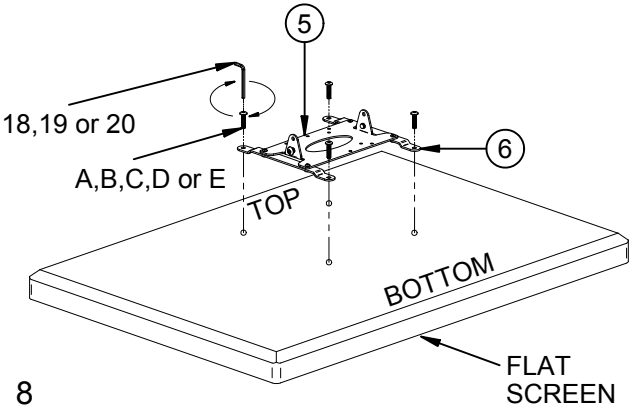

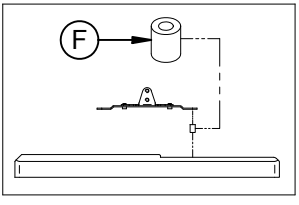

3 Hook flat screen on wall plate.

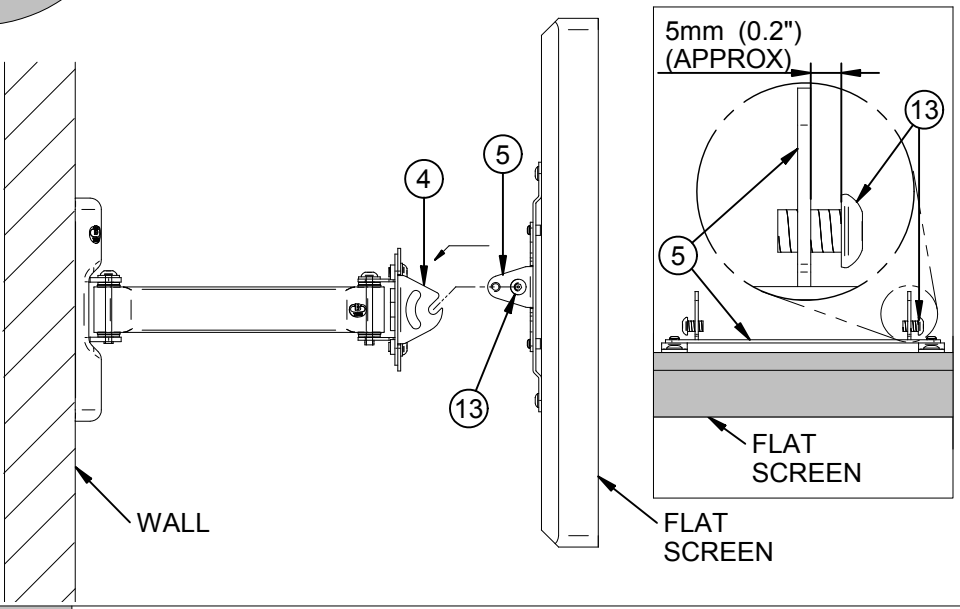

4 Secure in position using parts 10 and 11.

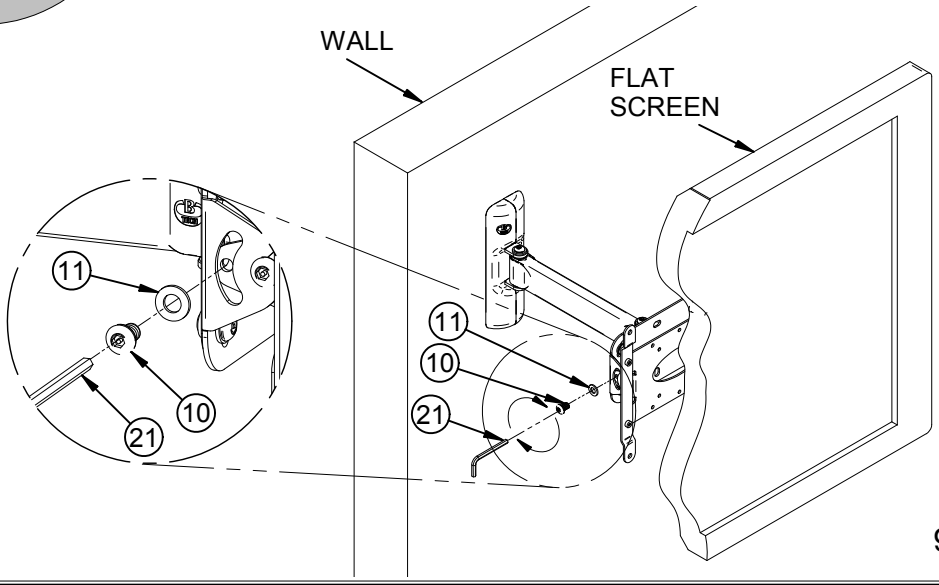

5

Adjust tilt and fix in position using parts 10 and 13.

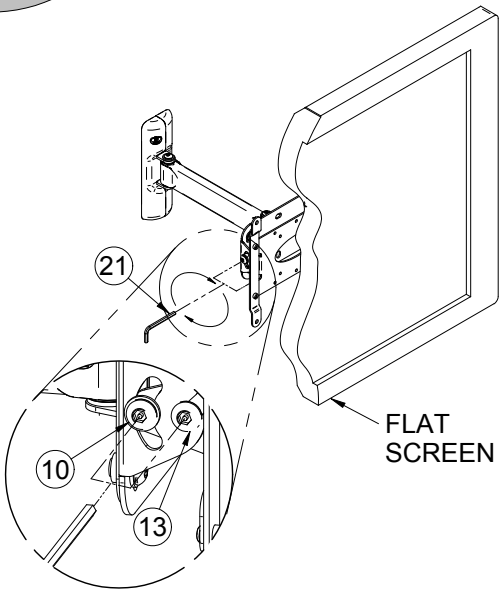

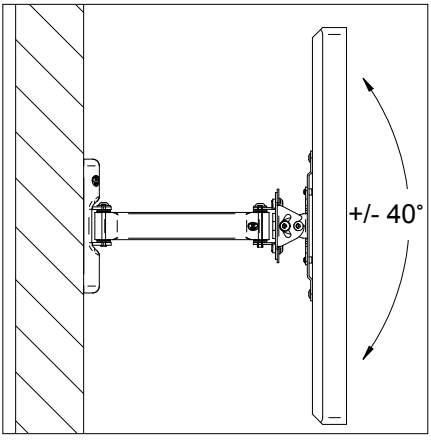

6

Optional - Cliplogic™ cable management clip

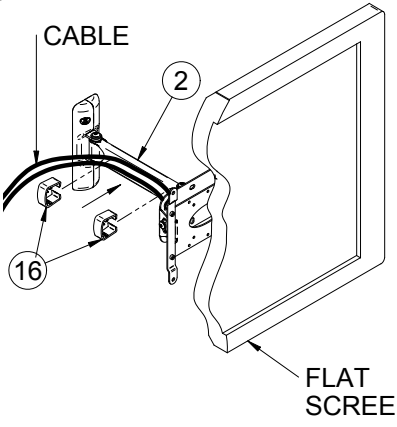

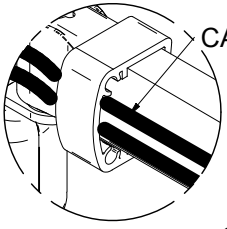

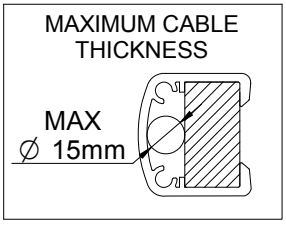

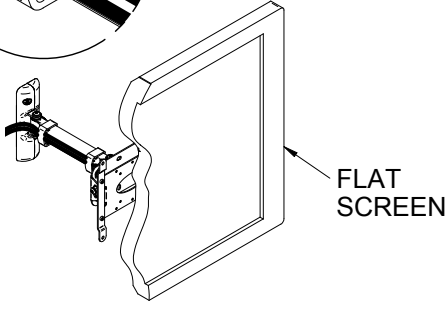

⚠ CAUTION: Ensure there is adequate cable slack for movement of the screen, and that cables will not be pinched when the mount is closed.

BT7514
PRODUCT DIMENSIONS

i) WITH LONG ARM

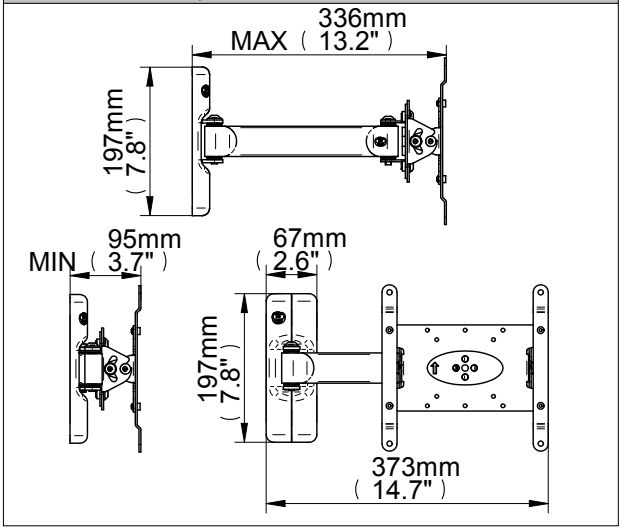

ii) WITH SHORT ARM

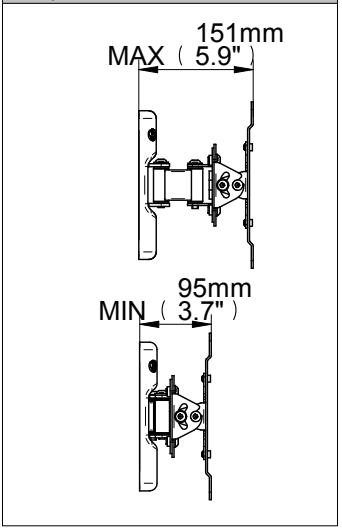

WALL PLATE

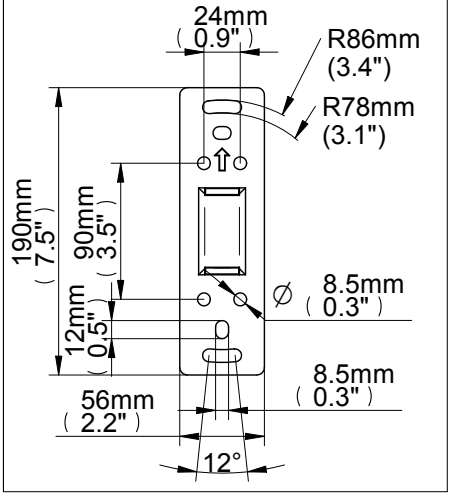

INTERFACE PLATE

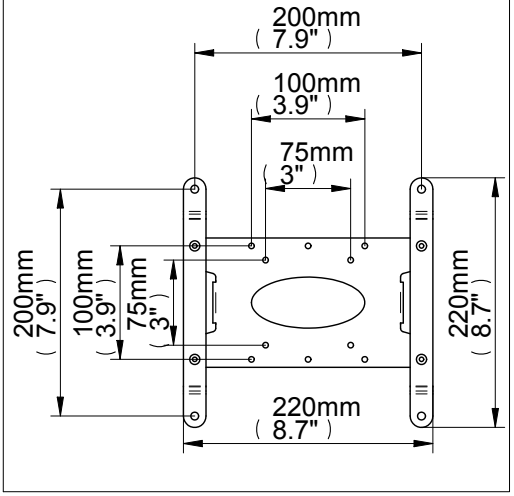

THESE INSTRUCTIONS ARE INTENDED AS A GUIDE ONLY AND B-TECH ACCEPTS NO LIABILITY FOR THE ACCURACY OF THE INFORMATION CONTAINED IN THIS DOCUMENT.

www.btechavmounts.com

B-TECH AUDIO VIDEO MOUNTS

HEAD OFFICE
Bennett House, Long March, Daventry, Northants., NN11 4NR, UK
Email: info@btechavmounts.co.uk

EUROPE

BELGIUM
Brixtonlaan 32, Zaventem 1930,
Brussels, Belgium
Email: info@btechproav.com

GERMANY
Dyrotzer Weg 26A, 14612 Falkensee,
Berlin, Germany
Email: info@btechdeutschland.com

NORTH AMERICA
203 Eggert Road,
Buffalo, NY 14215, USA
Email: info@btechavmounts.com

SINGAPORE
Ruby Industrial Complex,
Singapore 347740
Email: info@btechavmounts.com.sg

ASIA PACIFIC
1503 Prosperity Millennia Plaza,
Quarry Bay, Hong Kong
Email: info@btechavmounts.com.hk

©2011 Bennett Technologies Limited. All rights reserved.
B-Tech Audio Video Mounts is a division of Bennett Technologies Limited.
B-Tech, Better By Design, System 2 and Mountlogic are registered trademarks of Bennett Technologies Limited.
All other brands and product names are trademarks of their respective owners.
Photographs are for illustrative purposes only. E&OE.

IP-BT7514-V2.1-OR2BX-050111-03 MADE IN CHINA