BT4002

LARGE FLAT SCREEN FLOOR STAND

INSTALLATION GUIDE & PARTS LIST

This Pack Contains 1 Stand

PLEASE KEEP THIS FOR FUTURE REFERENCE

FEATURES

- Designed for flat screens up to 60” (153cm) / 70kg (154lbs)
- Can be used free standing or bolted to the floor
- Supplied with optional rubber feet
- Mounts screen in landscape or portrait style
- Must be used with interface kit (BT7507 / BT8600 / BT8500 / BT8501 / BT8576)

CONTENTS

Installation Safety Notes....2
Parts List....4
Installation Instructions....6
Optional Accessories....13
Typical Installations....14
Product Dimensions....15
B-Tech Contact Details....16

INSTALLATION TOOLS REQUIRED

Crosshead screwdriver

Hex Keys (Supplied)

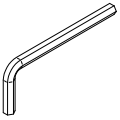

B-TECH AUDIO VIDEO MOUNTS

www.btechavmounts.com

INSTALLATION SAFETY INSTRUCTIONS

CAUTION: This stand is intended for use only with the maximum weights indicated. Use with flat screens heavier than the maximum indicated may result in instability causing possible injury.

Do not attempt to install this product until all instructions and warnings have been read and properly understood. Please keep these instructions for future reference.
B-Tech International Limited, its distributors and dealers are not liable or responsible for damage or injury caused by improper installation, improper use or failure to observe these safety instructions. In such cases, all guarantees will expire.

General

Great care must always be taken during installation as most AV equipment is of a fragile nature, possibly heavy and easily damaged if dropped.
If you do not fully understand the instructions or are not sure how to install this product safely, then please consult a professional for advice and/or to install this product for you. Failure to mount this product correctly may cause serious injury or death both during installation and at any time thereafter.
Do not mount any AV equipment that exceeds the specific weight limit of the product you are installing. This weight limit will be clearly stated on each product and its packaging and will vary from product to product.

Product location

Please pay careful attention to where this product is located. Some locations are not suitable for installation.
If located in a public or frequently populated area ensure that the product is out of the immediate reach of people.

Fixing hardware

It is highly recommended that all fixing screws be used where supplied and that the purpose of all other fixing hardware is fully understood. In some cases more AV equipment fixing hardware will be supplied to accommodate different models of equipment and set up configurations.
The installer must be satisfied that any supplied fixing hardware is suitable for each specific installation. If any fixing screws or included hardware are deemed not sufficient for a safe installation then please consult a professional or your local hardware store.

Hazard limitation

When routing cables take advantage of any built in cable management features that the product might provide and ensure that all cables are tidy and secure. Check to see that any moving aspect of the product can do so unhindered by any cabling.
Some products have moving parts and the potential to cause injury through the crushing or trapping of fingers or other body parts.
Particular attention to the nature of moving parts is required especially when assembling installing and adjusting during set up.
Immediately after installations double-check that the work done is safe and secure. Double-check all necessary fixings are present and are of ample tightness.
It is recommended that periodic inspections of the product and its fixing points are made as frequently as possible to ensure that safety is maintained. If in doubt consult a professional AV installer or other suitably qualified person.
The articulating arm may spring upward and may cause injury or damage to the equipment when the monitor is removed. Secure the arm by lifting the arm to highest position, to remove monitor safely.

CS
Společnost B-Tech International Ltd. doporučuje provést instalaci tohoto produktu prostřednictvím odborného instalátora AV či jinak způsobilé osoby. Společnost B-Tech International Ltd, její distributoři a prodejci nenesou odpovědnost za škody nebo zranění způsobená nevhodnou instalací. Tento výrobek je nutno umístit do vhodné konstrukce a používat jen po uvedenou maximální výšku.

DE
B-Tech International Ltd. empfiehlt, dass dieses Produkt durch einen qualifizierten AV-Techniker oder eine andere Person mit geeigneter Qualifikation installiert wird. B-Tech International Ltd, ihre Distributoren und Händler können nicht für durch fehlerhafte Montage verursachte Beschädigung oder Verletzung haftbar bzw. verantwortlich gemacht werden. Dieses Produkt muss auf eine geeignetem Untergrund montiert werden und darf nur bis zum angegebenen Höchstgewicht verwendet werden.

ES
B-Tech International Ltd. recomienda que un instalador de audio y video profesional u otra persona debidamente cualificada instalen este producto. B-Tech International Ltd, sus distribuidores y concesionarios no se hacen cargo ni se responsabilizan de ningún daño o lesión provocados por una instalación inapropiada. Este producto se debe montar en una estructura adecuada y se debe utilizar soportando solamente hasta el peso máximo indicado.

FR
B-Tech International Ltd. recommande de confier l'installation de ce produit à un installateur AV professionnel ou à une autre personne dûment qualifiée. B-Tech International Ltd, ses distributeurs et ses revendeurs ne sauraient être tenus responsables de tout dégât ou de toute blessure résultant d'une installation incorrecte. Ce produit doit être monté sur un support approprié et utilisé dans la limite du poids maximum indiqué.

IT
B-Tech International Ltd. consiglia di affidare l'installazione di questo prodotto a un installatore specializzato o ad altra persona adeguatamente qualificata. B-Tech International Ltd, i suoi distributori e rivenditori non accettano alcuna responsabilità nei riguardi di eventuali danni o infortuni causati da un'errata installazione. Questo prodotto deve essere fissato a una struttura idonea e utilizzato unicamente sino al peso massimo indicato.

NL
B-Tech International Ltd. adviseert om dit product te laten installeren door een professionele AV-installateur of andere hiervoor gekwalificeerde persoon. B-Tech International Ltd, haar distributeurs en dealers zijn niet aansprakelijk of verantwoordelijk voor schade of letsel die is veroorzaakt door onoordeelkundige installatie. Dit product moet worden gemonteerd aan een geschikte constructie, waarbij het aangegeven maximum gewicht niet mag worden overschreden.

PL
Firma B-Tech International Ltd. zaleca, aby ten produkt był instalowany przez profesjonalnych instalatorów AV lub inny odpowiednio przeszkolony personel. Firma B-Tech International Ltd, jej dystrybutorzy i dealerzy nie ponoszą odpowiedzialności za uszkodzenia lub obrażenia ciała powstałe w wyniku nieprawidłowej instalacji. Niniejszy produkt musi być zamontowany na odpowiedniej powierzchni, a podczas użytkowania nie wolno przekraczać podanego maksymalnego obciążenia.

PT
A B-Tech International Ltd. recomenda que a instalação deste produto seja efectuada por um instalador de AV profissional ou outra pessoa devidamente habilitada. A B-Tech International Ltd. e os seus distribuidores e concessionários não são responsáveis por danos ou lesões causados por uma instalação incorrecta. Este produto tem de ser montado numa estrutura adequada e utilizado somente até ao peso máximo indicado.

RU
Компания B-Tech International Ltd. рекомендует, чтобы установка данного изделия производилась инженером по установке аудио-видеотехники или другим специалистом с соответствующей квалификацией. Компания B-Tech International Ltd., ее дистрибьюторы и дилеры не несут ответственности за повреждения или травмы, полученные в результате неправильной установки. Данное изделие должно

BT4002 PARTS LIST

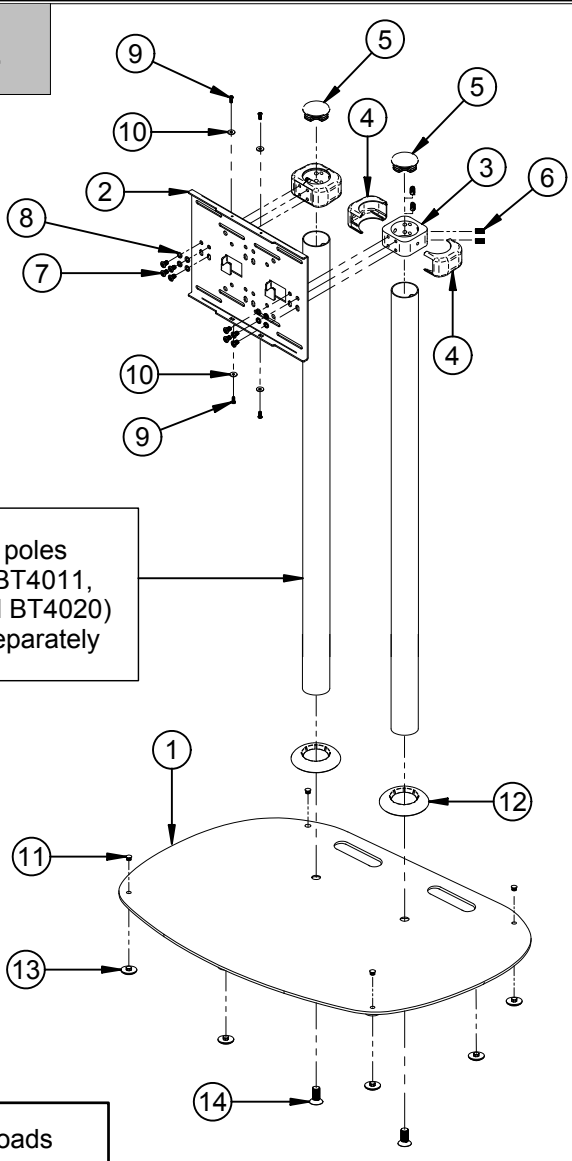

Ø60mm poles (BT4005, BT4011, BT4015 and BT4020) are sold separately

Suitable for loads up to 70kg (154lbs)

REF	PART NAME	QTY
1	FLOOR BASE	1
2	MOUNTING PLATE	1
3	Ø60mm COLLAR	2
4	COLLAR COVER	4
5	POLE END CAP	2
6	M10 x 20mm GRUB SCREW	8
7	M8 x 12mm SCREW	8
8	M8 SPRING WASHER	8
9	M5 x 12mm PIN HEX SECURITY SCREW	4
10	M6 METAL WASHER	4
11	PLASTIC HOLE CAP	4
12	POLE TRIM RING	2
13	RUBBER FOOT	8
14	M16 x 50mm HEX SCREW	2
15	4mm PIN HEX KEY (FOR PART 9)	1
16	5mm HEX KEY (FOR PART 6)	1
17	10mm HEX KEY (FOR PART 14)	1

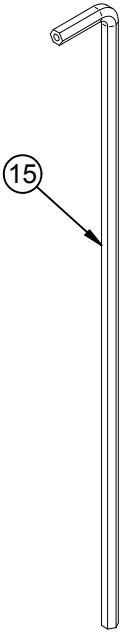

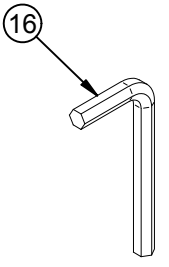

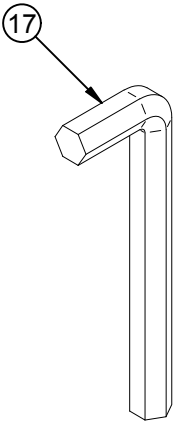

INSTALLATION INSTRUCTIONS

1 Attach the rubber feet to the floor base.

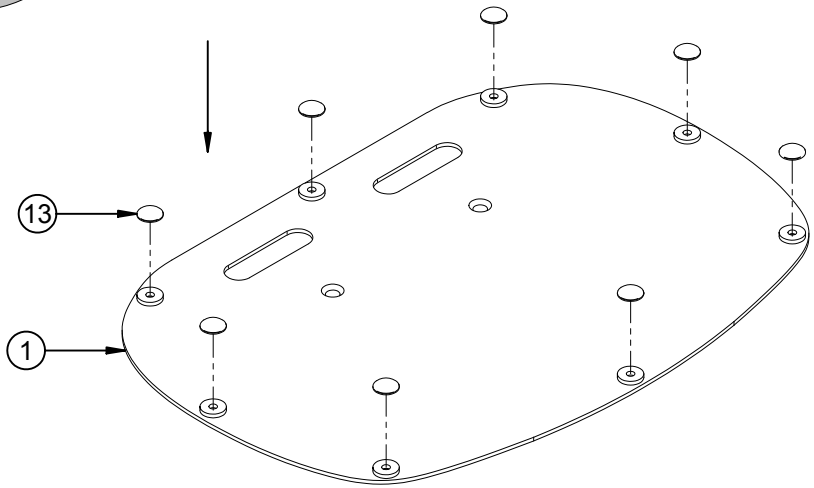

2 Optional: Slide trim rings onto the bottom of the poles.

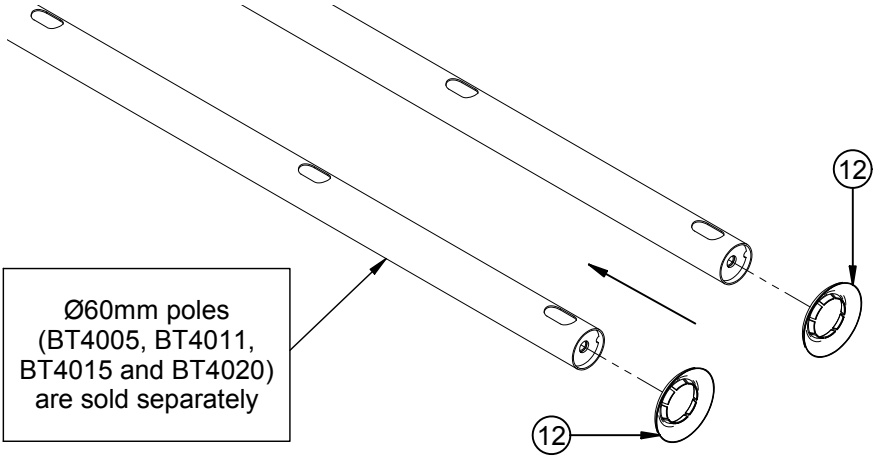

3 Fix the poles to the floor base.

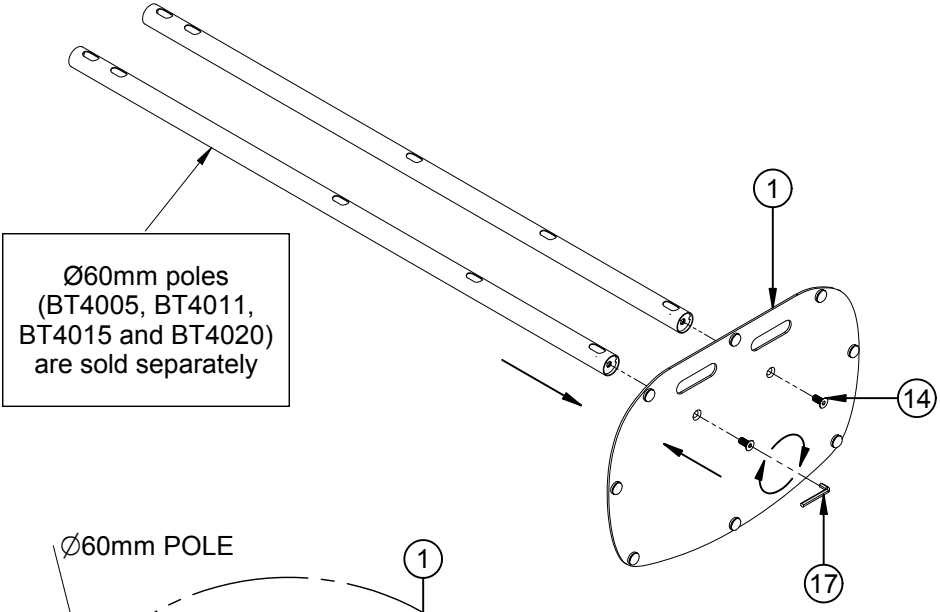

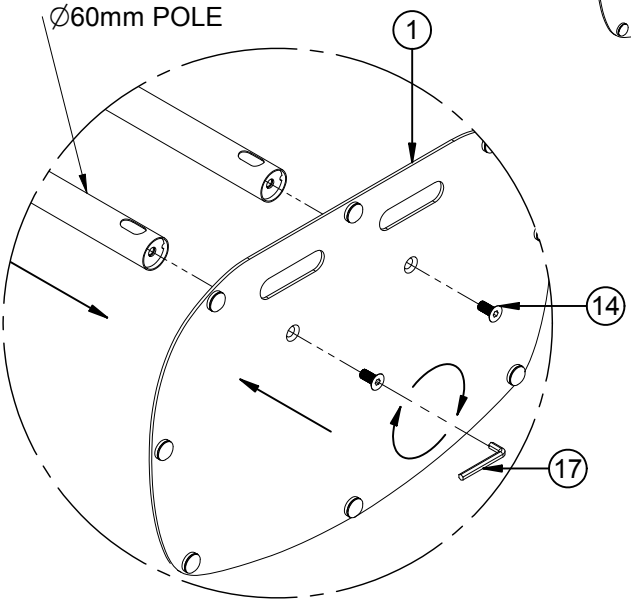

4

Fix the collars to the mounting plate.

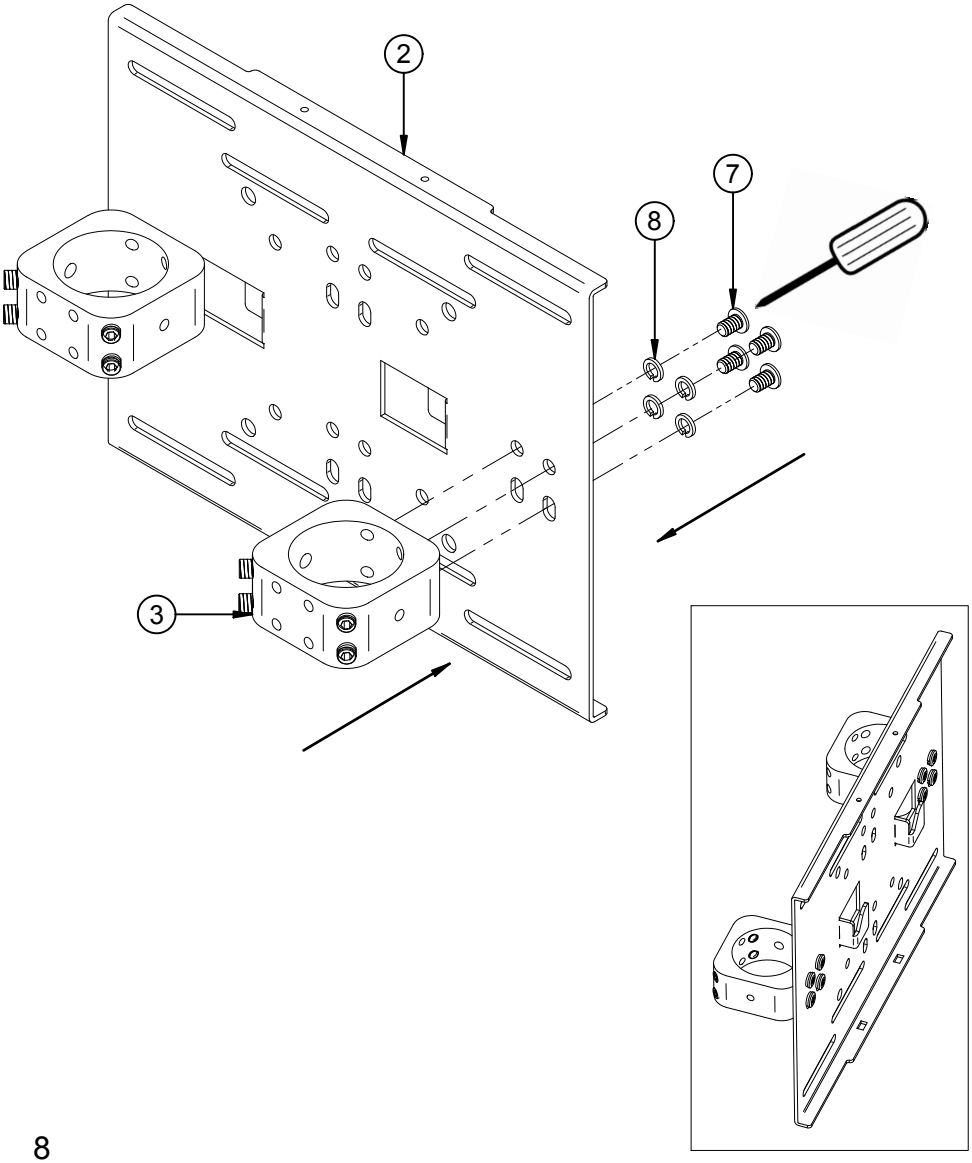

5 Fix collars and mounting plate to the poles.

i.Slide the collars and mounting plate onto the poles

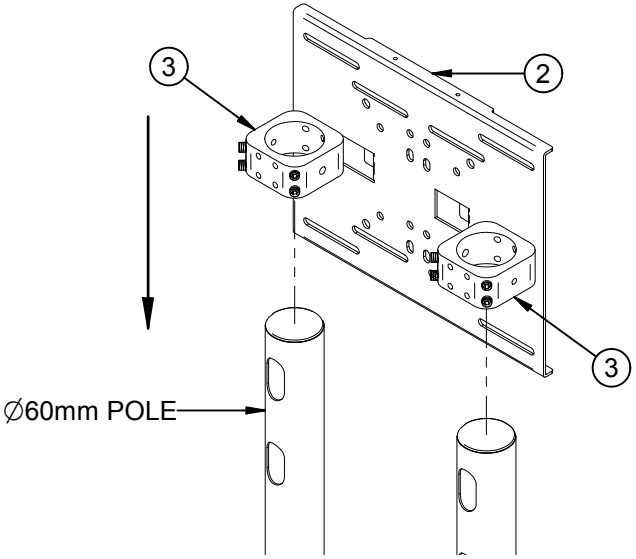

ii. Fix at desired height by tightening parts 6.

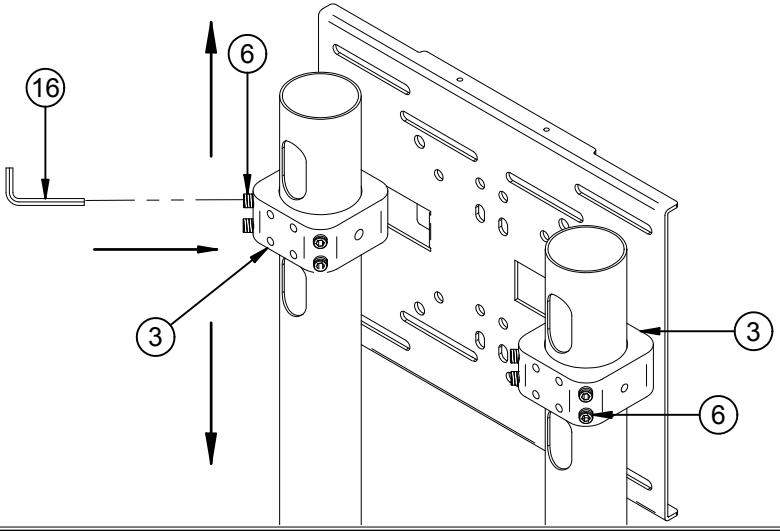

6 Fix an interface to the back of flat screen, then hook the flat screen onto the stand (in landscape or portrait).

i. Hook on flat screen

Possible Interface Kits : BT7507 / BT8600 / BT8500 / BT8501 / BT8576

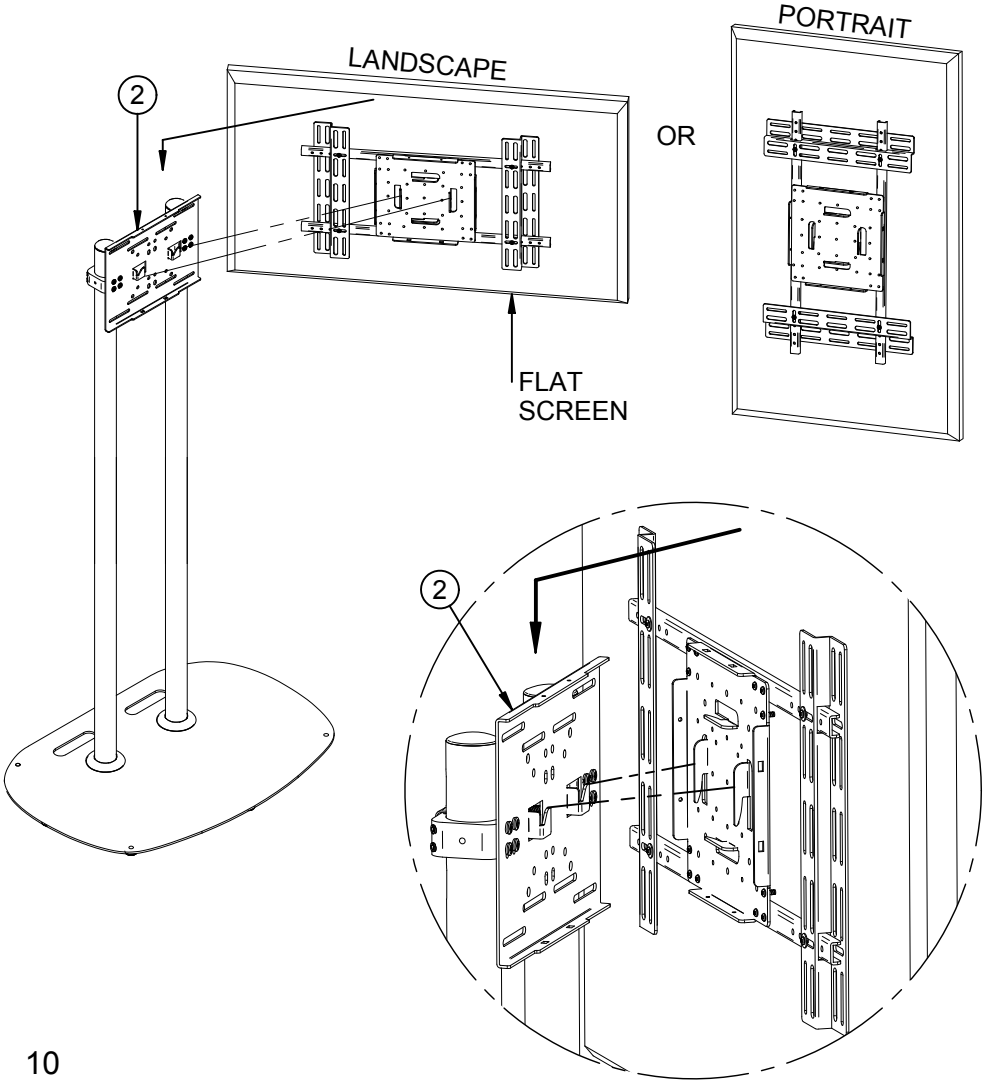

ii. Secure in place using parts 9 and 10.

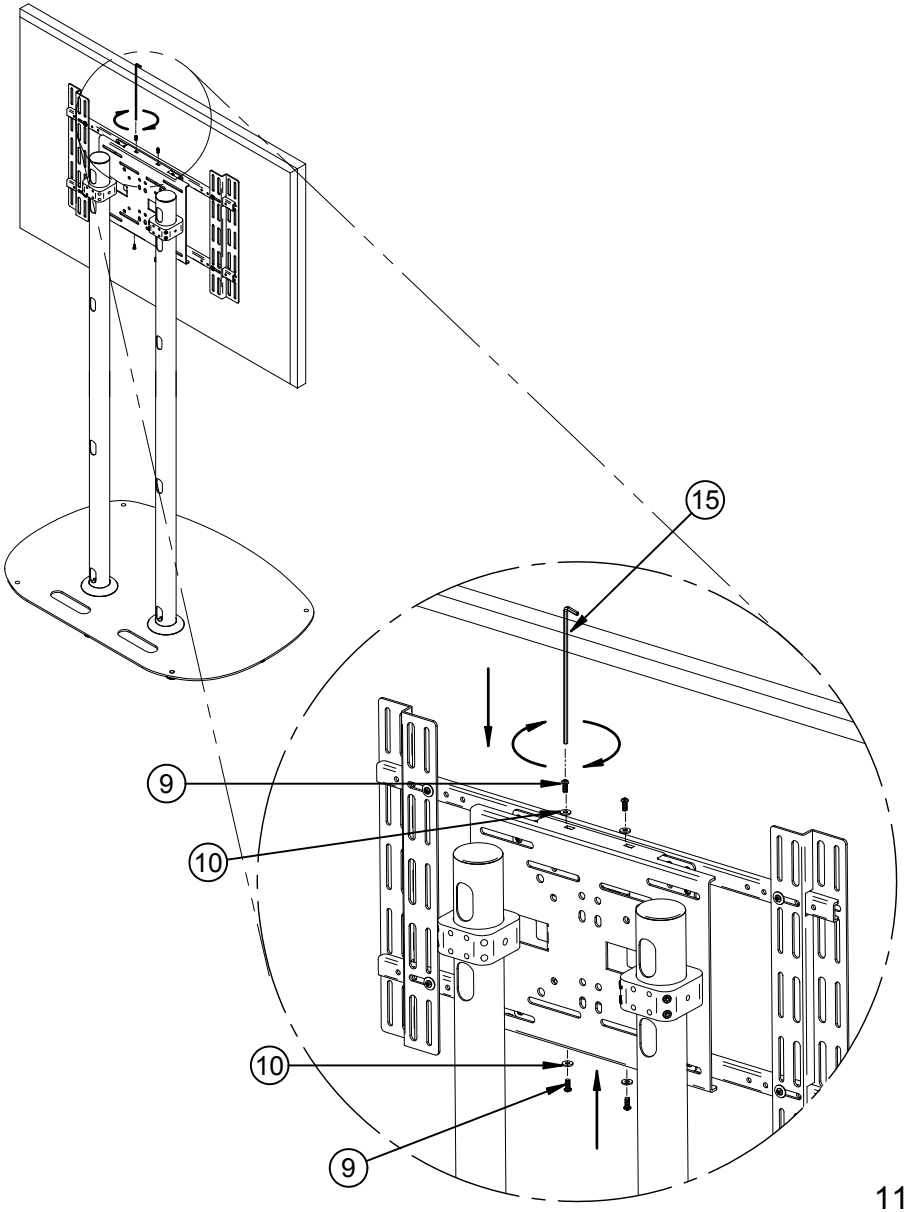

7 Attach the collar covers (parts 4), pole end caps (parts 5) and plastic hole caps (parts 11) to stand.

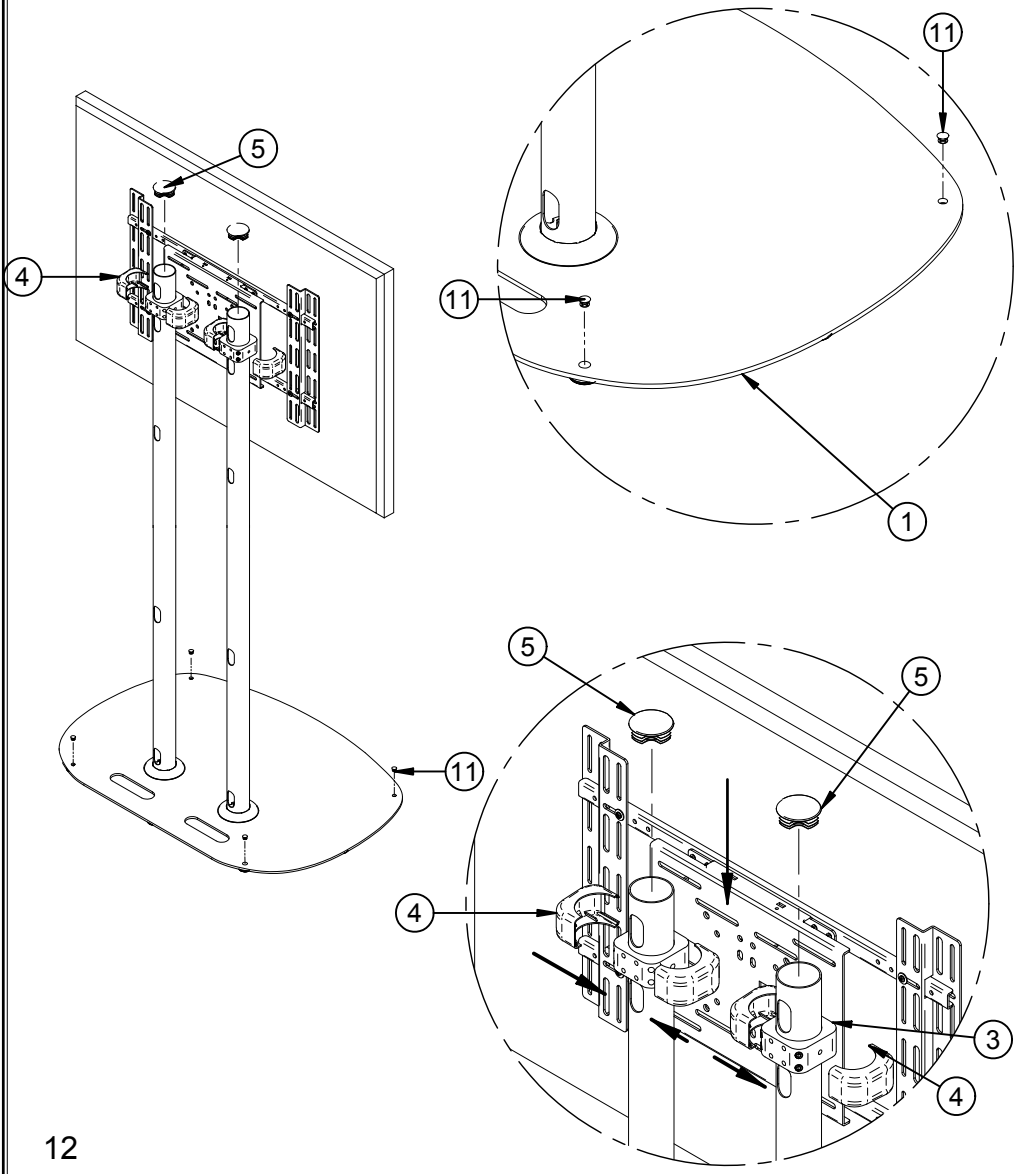

B-Tech AV Component Shelves

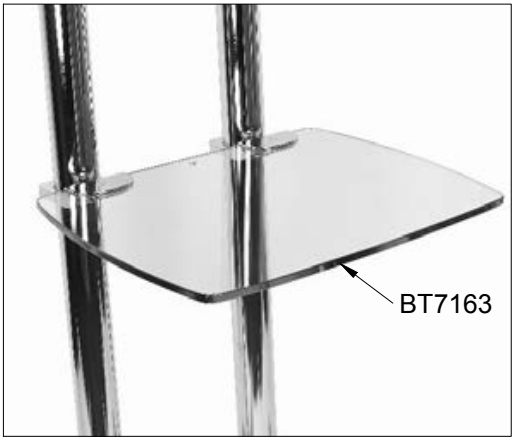

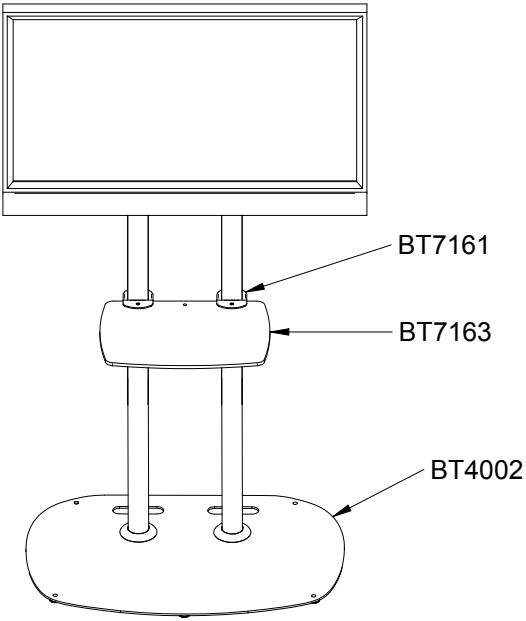

TYPICAL INSTALLATIONS

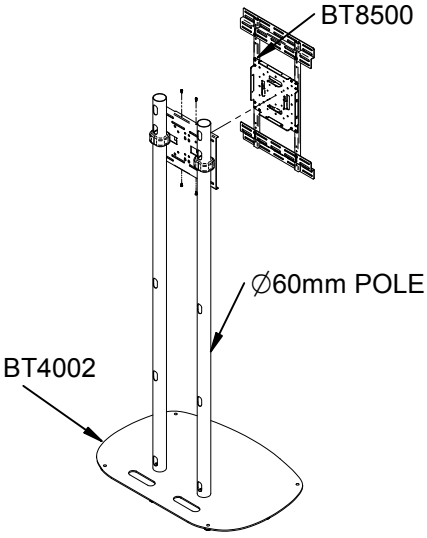

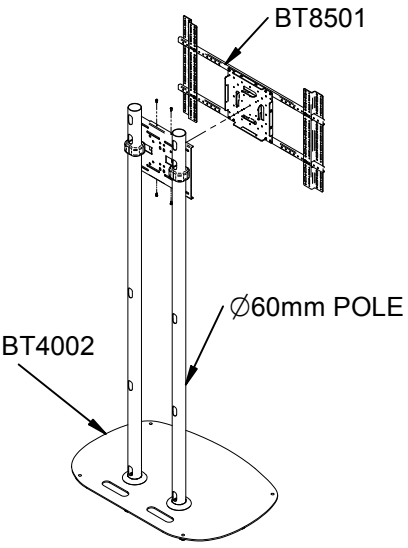

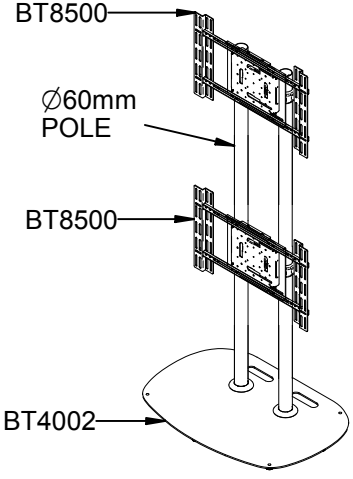

BT4002
PRODUCT DIMENSIONS

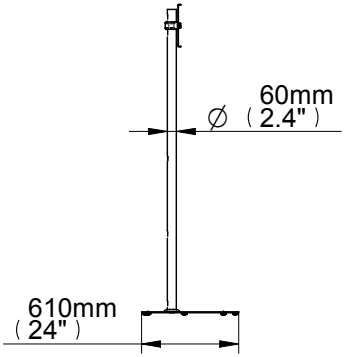

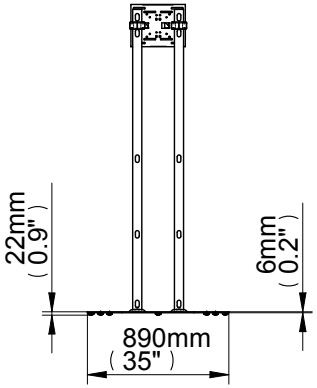

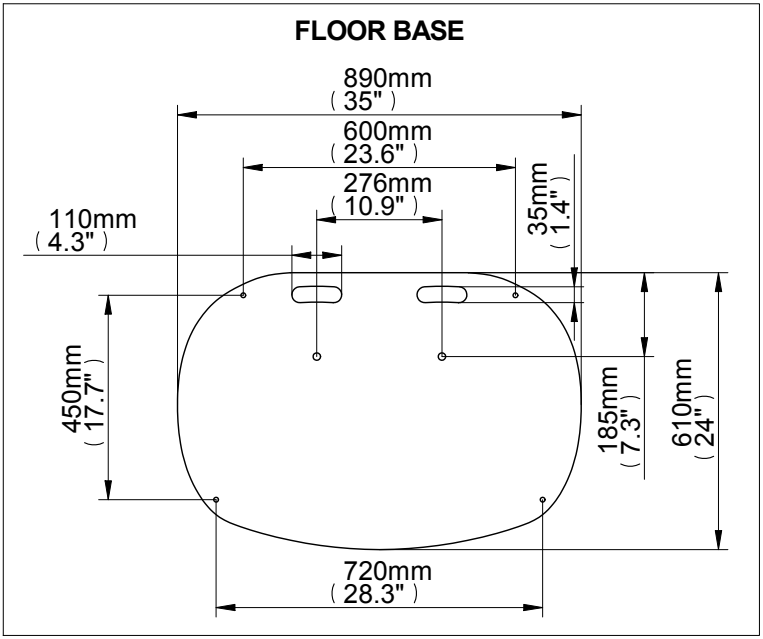

THESE INSTRUCTIONS ARE INTENDED AS A GUIDE ONLY AND B-TECH ACCEPTS NO LIABILITY FOR THE ACCURACY OF THE INFORMATION CONTAINED IN THIS DOCUMENT.

www.btechavmounts.com

B-TECH AUDIO VIDEO MOUNTS

HEAD OFFICE
Bennett House, Long March, Daventry, Northants NN11 4NR, UK
Email: info@btechavmounts.co.uk

EUROPE
Brixtonlaan 32, Zaventem 1930,
Brussels, Belgium
Email: info@btechproav.com

NORTH AMERICA
203 Eggert Road,
Buffalo, NY 14215, USA
Email: info@btechavmounts.com

SINGAPORE
Ruby Industrial Complex,
Singapore 347740
Email: info@btechavmounts.com.sg

ASIA PACIFIC
1503 Prosperity Millennia Plaza,
Quarry Bay, Hong Kong
Email: info@btechavmounts.com.hk

©2010 Bennett Technologies Limited. All rights reserved.
B-Tech Audio Video Mounts is a division of Bennett Technologies Limited.
B-Tech and Better By Design are registered trademarks of Bennett Technologies Limited.
All other brands and product names are trademarks of their respective owners.
Photographs are for illustrative purposes only. E&OE.

IP-BT4002-V2-PROBX-190810-01 MADE IN CHINA