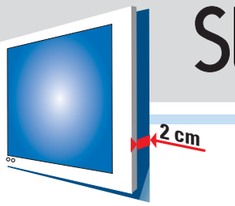

Slim

STILE

S100

14" → 23"
36cm → 58cm
max 20 kg (44 lbs)

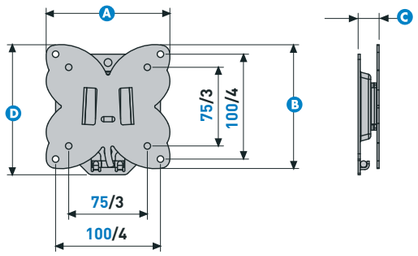

A = 118 mm (4.6")
B = 118 mm (4.6")
C = 20 mm (0.8")
D = 124 mm (4.9")

- *Supporto Vesa 75-100*
- *Speciale per TV a LED (solo 20 mm di spessore)*

- *Support Vesa 75-100*
- *Spécial TV LED et ultra flat (seulement 20 mm d'épaisseur)*

- *Vesa 75-100 wall mount*
- *Special for led screens (20mm from wall)*

S200

26" → 32"
66cm → 81cm
max 30 kg (66 lbs)

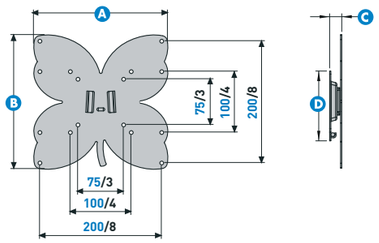

A = 220 mm (8.7")
B = 220 mm (8.7")
C = 20 mm (0.8")
D = 115 mm (4.5")

- *Supporto Vesa 200*
- *Speciale per TV a LED (solo 20 mm di spessore)*

- *Support Vesa 200*
- *Spécial TV LED et ultra flat (seulement 20 mm d'épaisseur)*

- *Vesa 200 wall mount*
- *Special for led screens (20mm from wall)*

S400

37" → 50"
94cm → 127cm
max 45 kg (99 lbs)

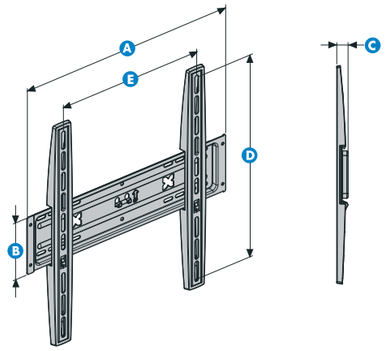

A = 448 mm (17.6")
B = 113 mm (4.4")
C = 22 mm (0.9")
D = max 400 mm (15.7")
E = max 400 mm (15.7")

- *Supporto Universale max 400x400 mm*
- *Speciale per TV a LED (solo 22 mm di spessore)*

- *Support Universel max 400x400mm livré avec entretoises pour une adaptation à tous les écrans plats*
- *Spécial TV LED et ultra flat (seulement 22 mm d'épaisseur)*

- *Universal wall mount (400x400mm max.)*
- *Special for led screens (22mm from wall)*

S800

50" → 63"
127cm → 160cm
max 55 kg (121lbs)

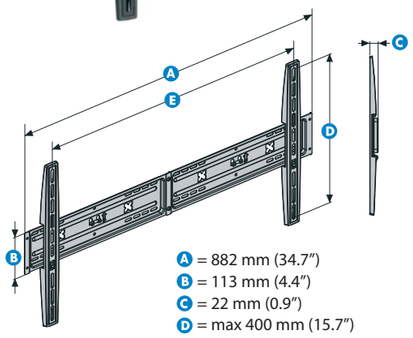

A = 882 mm (34.7")
B = 113 mm (4.4")
C = 22 mm (0.9")
D = max 400 mm (15.7")
E = max 834 mm (32.8")

- *Supporto Universale max 800x400 mm*
- *Speciale per TV a LED (solo 22 mm di spessore)*

- *Support Universel max 800x400mm Livré avec entretoises pour une adaptation à tous les écrans plats*
- *Spécial TV LED et ultra flat (seulement 22 mm d'épaisseur)*

- *Universal wall mount (800x400mm max.)*
- *Special for led screens (20mm from wall)*